EE 232 Lightwave Devices
Lecture 9: Integrated Photonic Components (3)
Microring Resonator

Instructor: Ming C. Wu

University of California, Berkeley
Electrical Engineering and Computer Sciences Dept.

Reading: Chuang, Chap 8

Acknowledgment: some lecture materials are provided by Seth Fortuna

Microring Resonators

- Compact resonators for photonic integrated circuits (PIC)
- Small footprint, particularly in Si photonics (high index contrast waveguide)
- Wide range of applications, including modulators, lasers, detectors, filters, switches, dispersion management, nonlinear optical devices (optical frequency combs), …

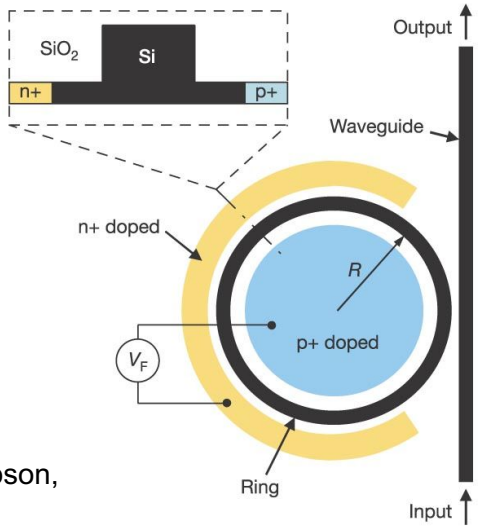

Q. Xu, .., M. Lipson, Nature 2005

Microring modulator integrated with CMOS

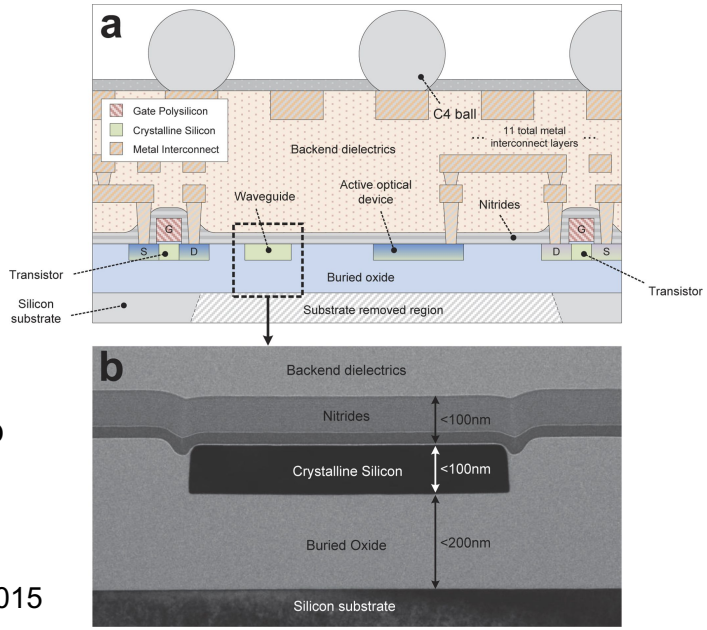

C. Sun, …. V.M. Stonanovic, Nature 2015

Coupled Mode Equations for Microring Resonators

$$\begin{bmatrix} b_1 \\ b_2 \end{bmatrix} = \begin{bmatrix} t & i\kappa \\ i\kappa^* & t^* \end{bmatrix} \begin{bmatrix} a_1 \\ a_2 \end{bmatrix}$$

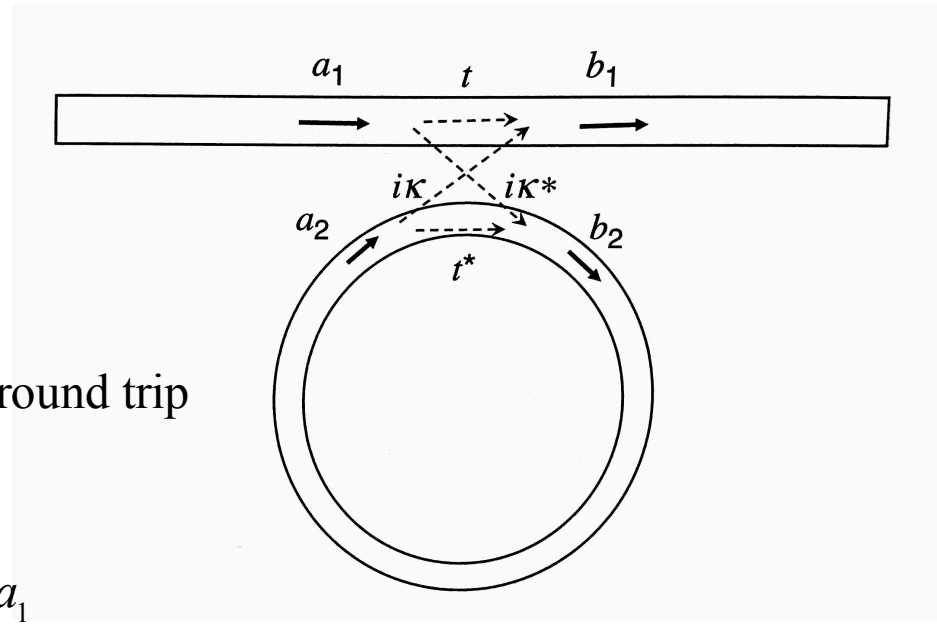

$$t \cdot t^* + \kappa \cdot \kappa^* = 1$$

$$a_2 = e^{-\alpha L/2 + i\beta_{eff} L} b_2 = a e^{i\theta} b_2 = X \cdot b_2$$

$$\begin{cases} a = e^{-\alpha L/2} : \text{ remaining field after one tround trip} \\ \theta = \beta_{eff} L \ : \text{ round-trip phase shift} \end{cases}$$

$$b_2 = i\kappa^* a_1 + t^* a_2 = \frac{a_2}{X} \qquad \Rightarrow \ a_2 = \frac{i\kappa^*}{\frac{1}{X} - t^*} a_1$$

$$b_1 = t a_1 + i\kappa a_2 = t a_1 + i\kappa \frac{i\kappa^*}{\frac{1}{X} - t^*} a_1 = \frac{t\left(\frac{1}{X} - t^*\right) - |\kappa|^2}{\frac{1}{X} - t^*} a_1 = \frac{\frac{t}{X} - 1}{\frac{1}{X} - t^*} = \frac{t - X}{1 - t^* X}$$

$$\frac{b_1}{a_1} = \frac{t - a e^{i\theta}}{1 - a t^* e^{i\theta}}$$

Transfer Characteristics for Microring Resonators

$$T = \left|\frac{b_1}{a_1}\right|^2 = \frac{|t|^2 + a^2 - 2a|t|\cos(\theta - \theta_t)}{1 + |at|^2 - 2a|t|\cos(\theta - \theta_t)}$$

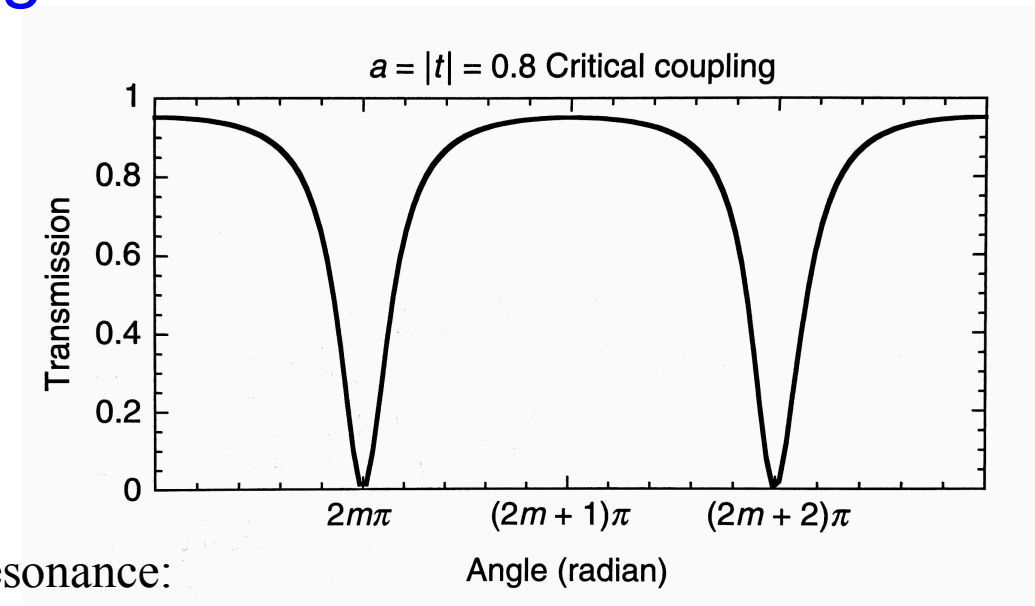

Transmission has a dip at resonance:

$$\theta - \theta_t = 2m\pi = \beta_{eff} L - \theta_t = \frac{2\pi f_m}{c} n_{eff} L - \theta_t$$

Frequency spacing between consecutive resonance:

$$\Delta f = FSR = f_{m+1} - f_m = \frac{2\pi}{\frac{2\pi n_{eff} L}{c}} = \frac{c}{n_{eff} L} \quad : \text{ Free spectral rang}$$

Transmission at resonance:

$$T_{res} = \frac{|t|^2 + a^2 - 2a|t|}{1 + |at|^2 - 2a|t|} = \frac{(|t| - a)^2}{(1 - a|t|)^2}$$

$T_{res} = 0$ when $a = |t|$: critical coupling condition

Coupling Regimes of Microring Resonator

At resonance,

$$T = \left|\frac{b_1}{a_1}\right|^2 = \frac{\left(|t| - a\right)^2}{\left(1 - a|t|\right)^2}$$

(1) Critical coupling: $a = |t|$

destructive interference completely cancels out transmitted light, b_1

(2) Under coupling: $a < |t|$

(3) Over coupling: $a > |t|$

(4) With gain, a could > 1.

Lasing occurs when $a = \frac{1}{|t|}$

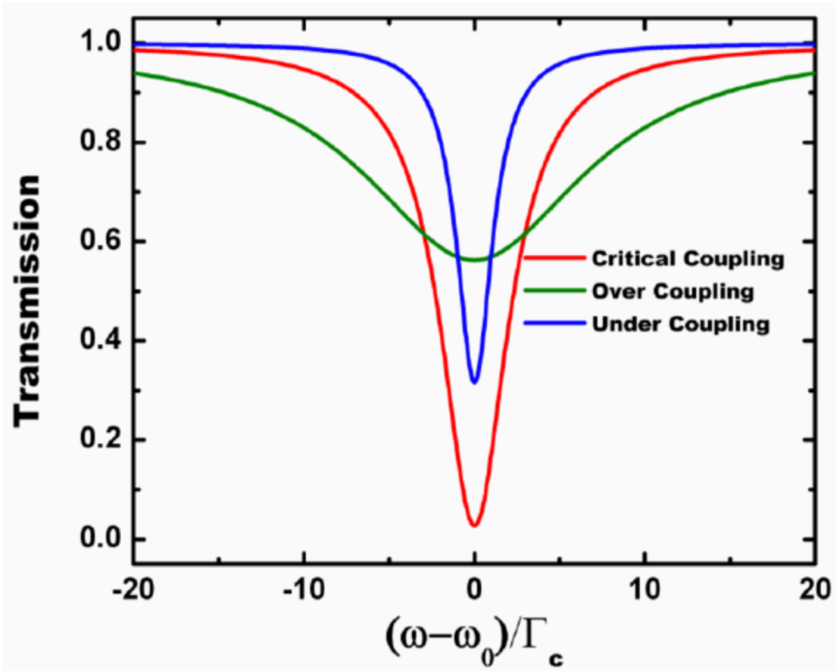

Another expression for critical coupling:

$1 - a^2 = 1 - e^{-\alpha L}$ = round-trip loss

$1 - |t|^2 = |\kappa|^2$

(1) Critical coupling: coupling = round-trip loss

(2) Under coupling: coupling < round-trip loss

(3) Over coupling: coupling > round-trip loss

Optical Add-Drop Multiplexer (4 port device)

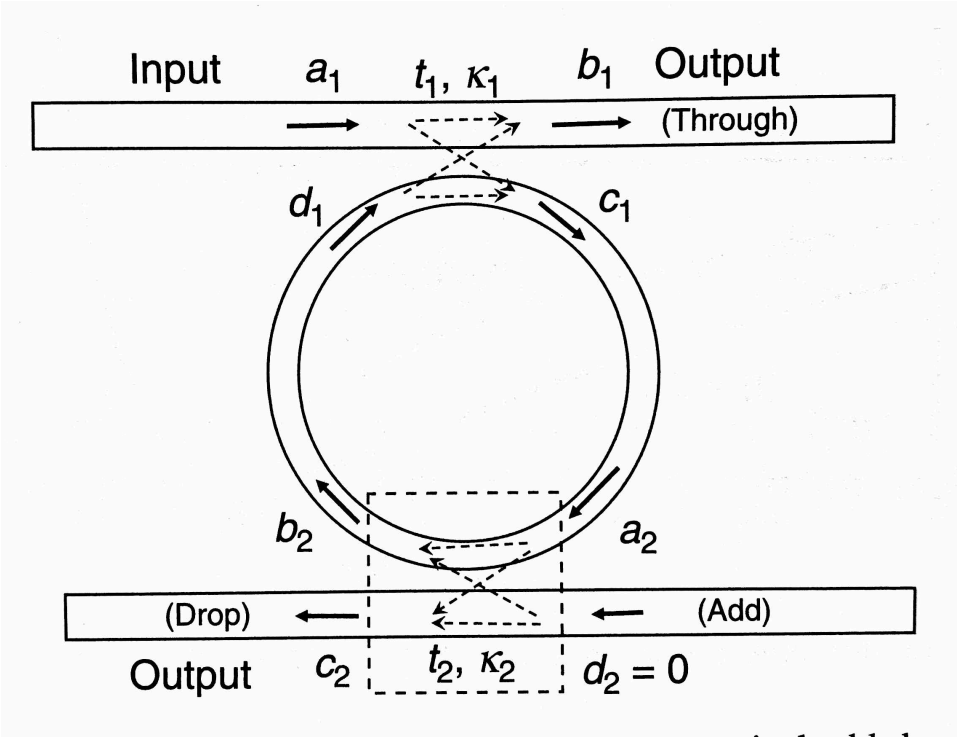

Transfer Curves

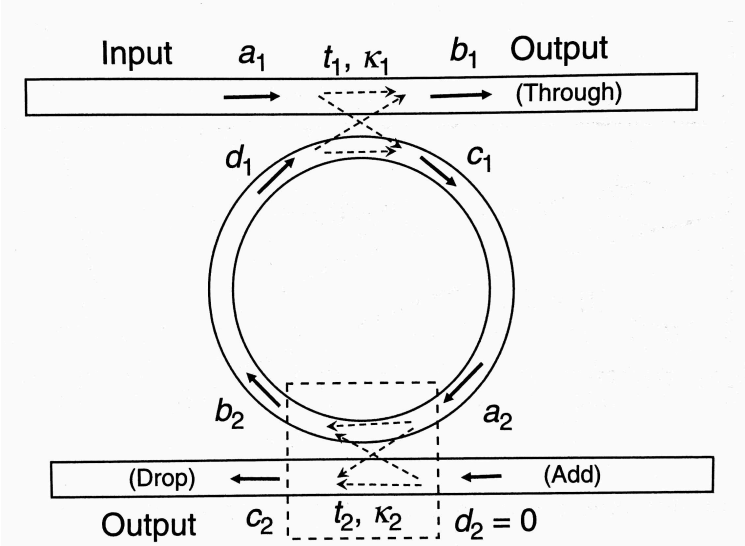

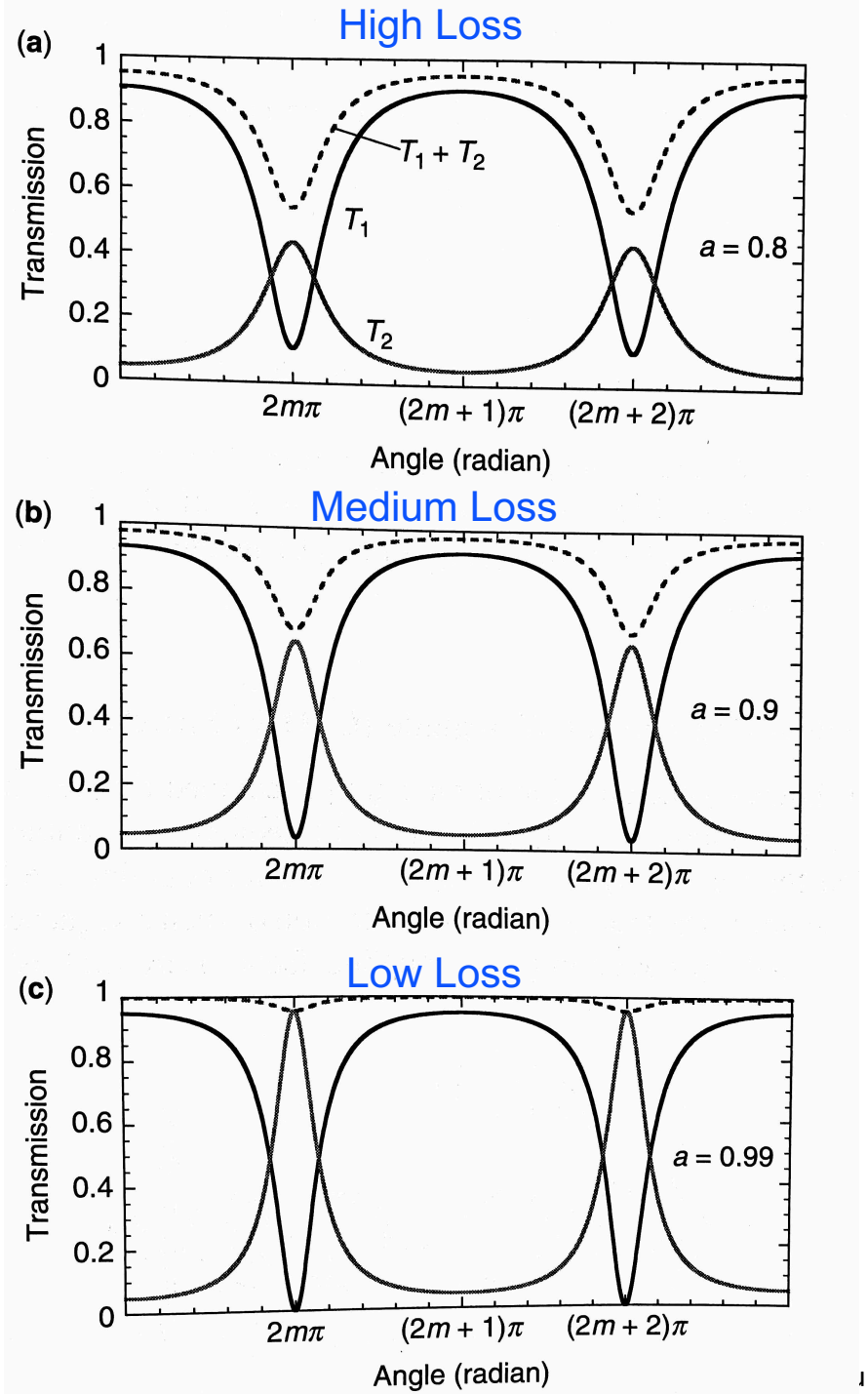

Similarity with Fabry-Perot Resonator

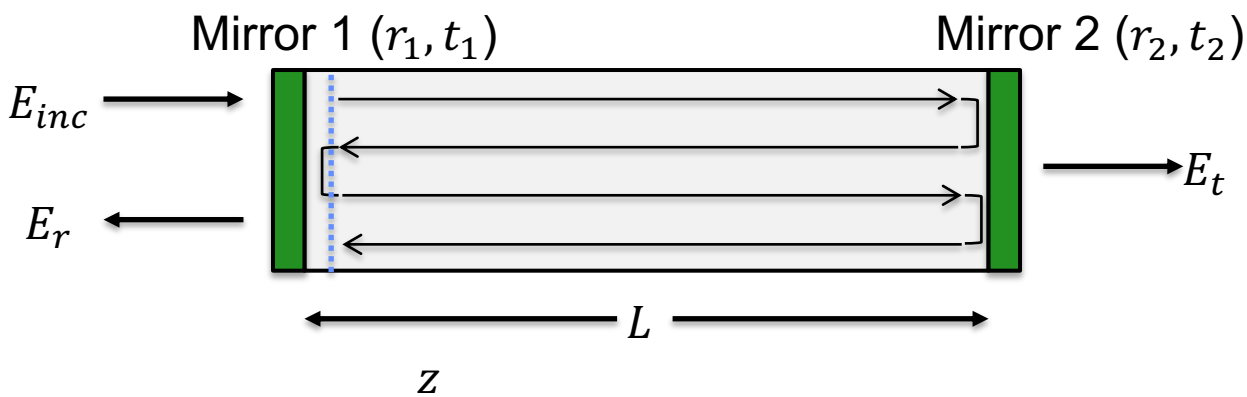

$$T = \frac{|E_t|^2}{|E_i|^2} = \frac{(1-r_1^2)(1-r_2^2)}{(1-r_1 r_2)^2 + 4 r_1 r_2 \sin^2 kL}$$

$$R = \frac{|E_r|^2}{|E_i|^2} = 1 - T$$

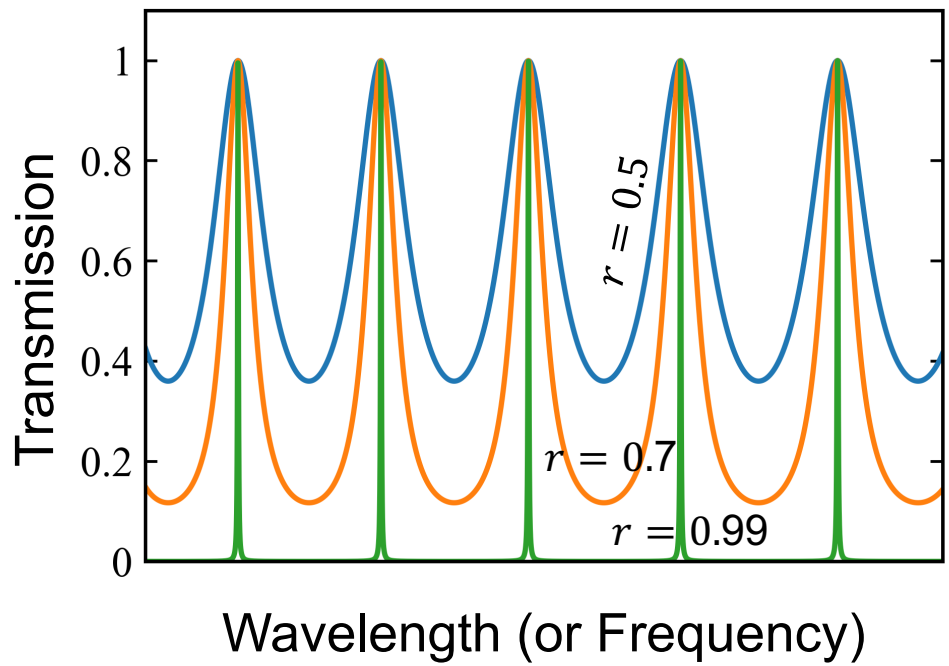

Similarity with Fabry-Perot Resonator

Reflection = Through Port

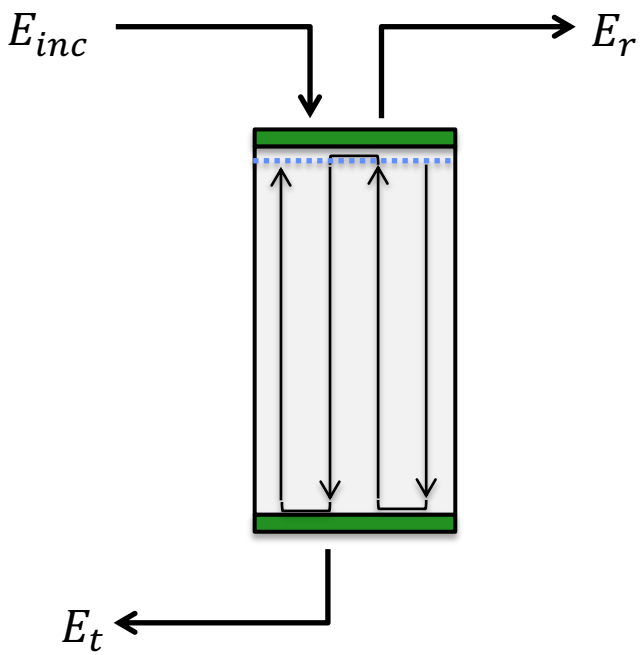

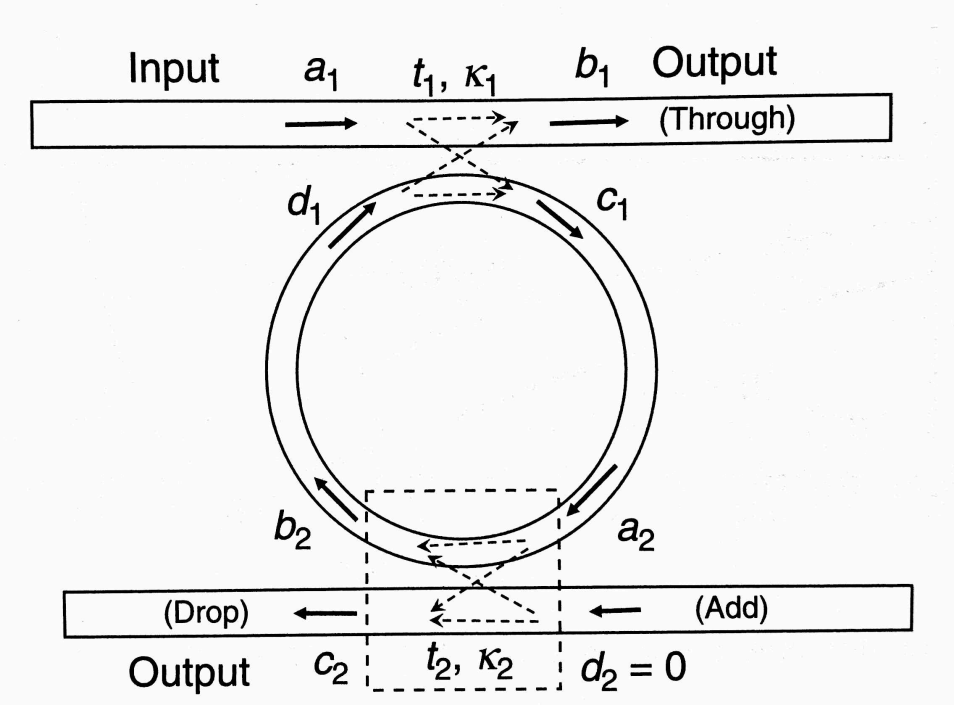

Transmission = Drop Port